elektrogros ag
LED LICHTTECHNIK
LEUCHTENZUBEHÖR

Niedervolt Halogenfassung 12 - 24V

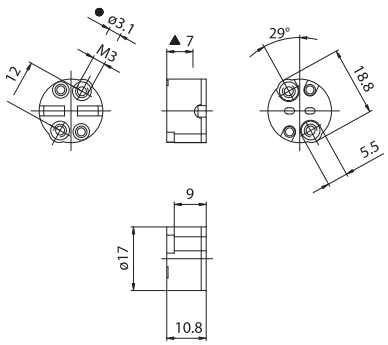

Artikel	**P72**
Fassung:	G6.35 - GY6.35
Rated voltage:	**24 V**
Rated current:	**8 A**
Working temperature:	**T 210°C**
Connected cables	
working temperature:	**T 90°÷ 250°C**
Protection grade:	**IP20**
In conformity to the standards:	**EN 60838-1**
Approval marks:	**ENEC 03**

P72: version with contact bushes threaded M3.