elektrogros ag
LED LICHTTECHNIK
LEUCHTENZUBEHÖR
A: Rütistrasse 18, CH-8952 Schlieren
T: +41 (0)44 730 56 56 W: www.elektrogros.ch
E: info@elektrogros.ch E: shop@elektrogros.ch

V5740F/SA

E40	16A-750V	T270

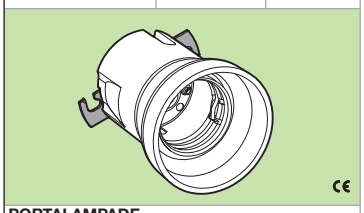

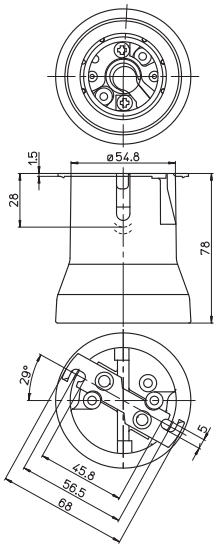

PORTALAMPADE
con freno lampada
— Corpo in ceramica
— Contatti in rame/ottone nichelato
LAMPHOLDERS
with lamp locking device
— Ceramic body
— Nickel plated copper/brass contacts

1,5-4 | 1,5-4 | 9-10 | 5kV

305 305/S 305/DS 305/S-DS 305/DTT 305/S-DTT

G12	4A-1000V	T250

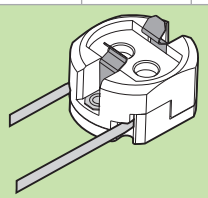

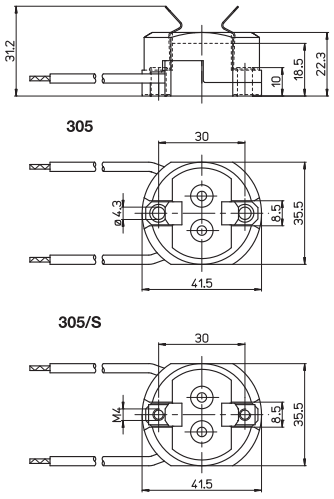

PORTALAMPADE IP20
.../S= con bussole filettate M4
— Corpo in steatite
— Contatti in nichel
IP20 LAMPHOLDERS
.../S= with M4 threaded bushes
— Steatite body
— Nickel contacts

305/...-UR (660W-600V)

305/...-UR (a richiesta/on demand)

SIL 0,75 | DS 1 | DTT 0,75 | 20 cm | 5kV

1305 1305/DS 1305/DTT

G12	2A-250V	T250

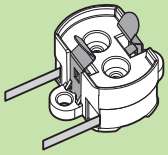

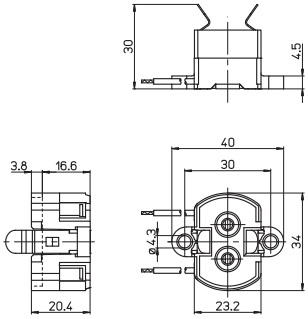

PORTALAMPADE IP20
— Corpo in LCP
— Contatti in nichel

IP20 LAMPHOLDERS
— LCP body
— Nickel contacts

Max. 70W

SIL 0,75 | DS 1 | DTT 0,75 | 20 cm | 5kV

1305/SF

G12	2A-250V	T250

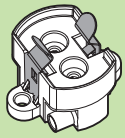

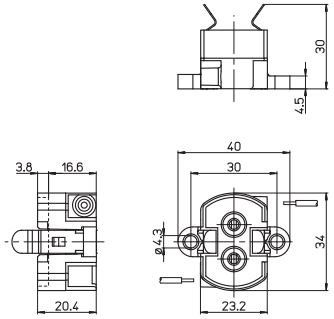

PORTALAMPADE IP20
— Corpo in LCP
— Contatti in acciaio nichelato

IP20 LAMPHOLDER
— LCP body
— Nickel plated steel contacts

Max. 70W

ø1,8 max | 10-11 | 0,5-1 | 8-9 | 5kV

2305 2305/DS 2305/DTT

G12	2A-250V	T250

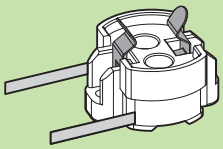

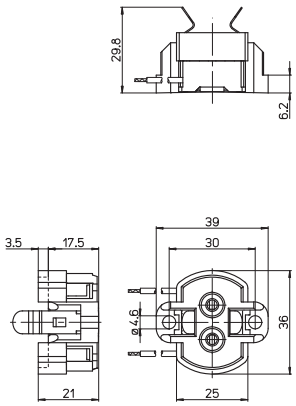

PORTALAMPADE IP20
— Corpo in Steatite/LCP
— Contatti in nichel

IP20 LAMPHOLDERS
— Steatite/LCP body
— Nickel contacts

35W 70W 150W

SIL 0,75 | DS 1 | DTT 0,75 | 20 cm | 5kV

2305/SF

G12	2A-250V	T250

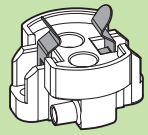

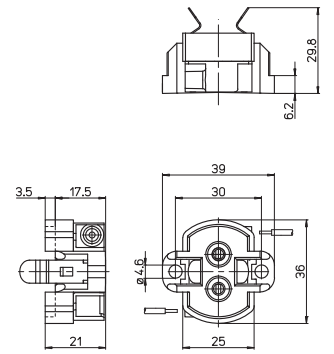

PORTALAMPADE IP20
— Corpo in Steatite/LCP
— Contatti in acciaio nichelato

IP20 LAMPHOLDER
— Steatite/LCP body
— Nickel plated steel contacts

35W 70W 150W

ø1,8 max | 10-11 | 0,5-1 | 8-9 | 5kV

AAG STUCCHI
Essential for lighting

For the symbols look at the cover