elektrogros ag
LED LICHTTECHNIK
LEUCHTENZUBEHÖR
A: Rütistrasse 18, CH-8952 Schlieren
T: +41 (0)44 730 56 56 W: www.elektrogros.ch
E: info@elektrogros.ch E: shop@elektrogros.ch

1228/C-LCP 1228/L-LCP
1228/C-LCP-DS 1228/L-LCP-DS
1228/C-LCP-DP1 1228/L-LCP-DP1

GU6,5	2A-500V	T260

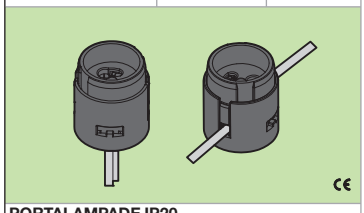

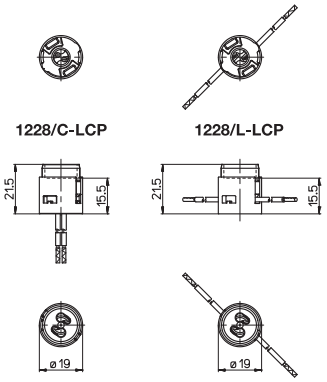

PORTALAMPADE IP20
— Corpo in LCP nero
— Copertura esterna in LCP nero
— Contatti in materiali speciale nichelati

IP20 LAMPHOLDERS
— Black LCP body
— Black LCP external cover
— Special nickel plated alloy contacts

1228/...-UR

1228/...-UR (a richiesta/on demand)

SIL 1 | DS 0,75 | DP 1 | 24 cm | 5kV | 250V | S-1307/111 | 1307/...

1307/C-LCP 1307/L-LCP
1307/C-LCP-TF 1307/L-LCP-TF
1307/C-LCP-DTT 1307/L-LCP-DTT

PGJ5	2A-250V	T260

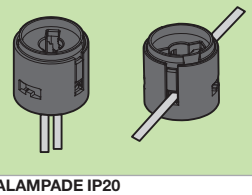

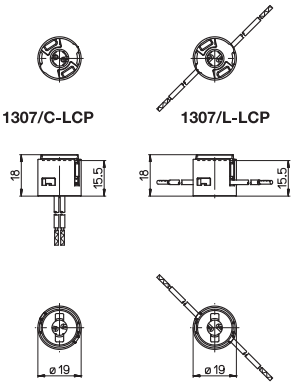

PORTALAMPADE IP20
— Corpo in LCP nero
— Copertura esterna in LCP nero
— Contatti in materiali speciale nichelati

IP20 LAMPHOLDERS
— Black LCP body
— Black LCP external cover
— Special nickel plated alloy contacts

1307/...-UR

licenza di brevetto PCT n°:
license of PCT patent pending nr:
W02006/027816

1307/...-UR (a richiesta/on demand)

SIL 0,75 | TF 0,75 | DTT 0,75 | 24 cm | 2,5kV | 250V | S-1307/111 | 1307...

1226/X-SF

GX10	2A-250V	T270

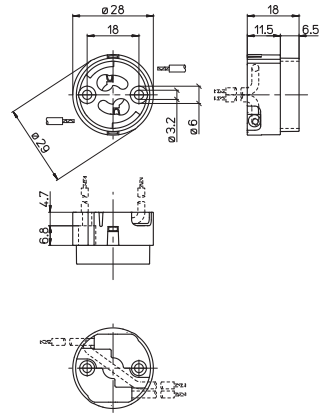

PORTALAMPADE IP20
— Corpo in LCP
— Contatti in acciaio nichelato

IP20 LAMPHOLDER
— LCP body
— Nickel plated steel contacts

0,5-1 | 7-8 | 5kV

2226/X-SF

GX10	2A-500V	T250

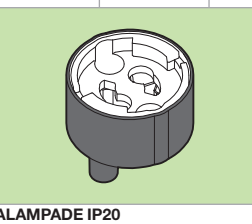

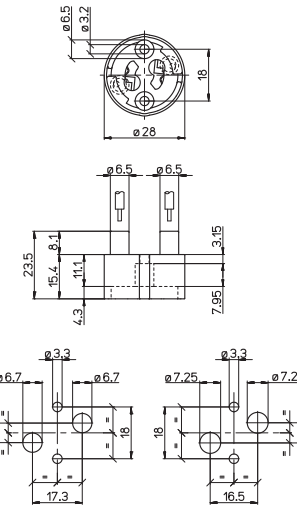

PORTALAMPADE IP20
— Parte frontale in steatite
— Corpo in PPS (T1= 240 °C)
— Contatti in acciaio nichelato

IP20 LAMPHOLDER
— Steatite body
— PPS base (T1= 240 °C)
— Nickel plated steel contacts

ø1,8 max | 0,5-1 | 8-9 | 5kV

3226/X-SF

GX10	2A-250V	T270

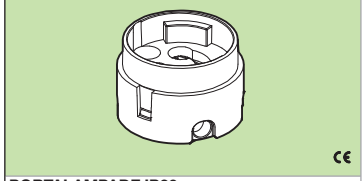

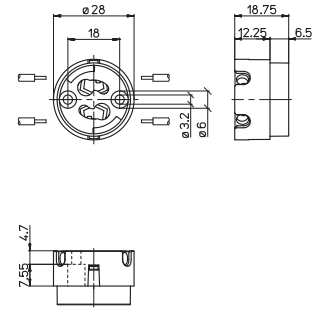

PORTALAMPADE IP20
— Corpo in LCP
— Contatti in acciaio nichelato

IP20 LAMPHOLDER
— LCP body
— Nickel plated steel contacts

ø1,8 max | 0,5-1 | 7-8 | 5kV | 118/...

2226/Y-SF

GY10	2A-500V	T250

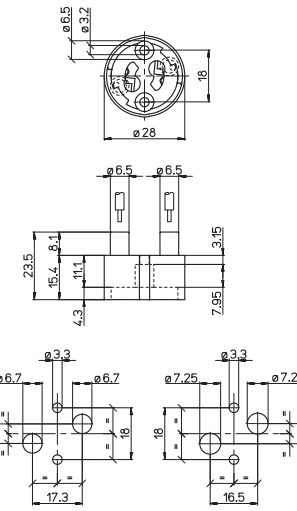

PORTALAMPADE IP20
— Parte frontale in steatite
— Corpo in PPS (T1= 240 °C)
— Contatti in acciaio nichelato

IP20 LAMPHOLDER
— Steatite body
— PPS base (T1= 240 °C)
— Nickel plated steel contacts

ø1,8 max | 0,5-1 | 8-9 | 5kV

Significato dei simboli sulla copertina

AAG STUCCHI
Essential for lighting