elektrogros ag
LED LICHTTECHNIK
LEUCHTENZUBEHÖR
A: Rütistrasse 18, CH-8952 Schlieren
T: +41 (0)44 730 56 56 W: www.elektrogros.ch
E: info@elektrogros.ch E: shop@elektrogros.ch

3b

A.A.G. STUCCHI

340/F 340/M 341/F

G13	2A-250V	T110

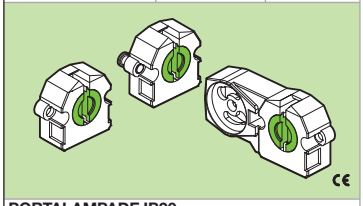

PORTALAMPADE IP20
— Corpo in policarbonato
— Contatti in lega di rame

IP20 LAMPHOLDERS
— Polycarbonate body
— Copper alloy contacts

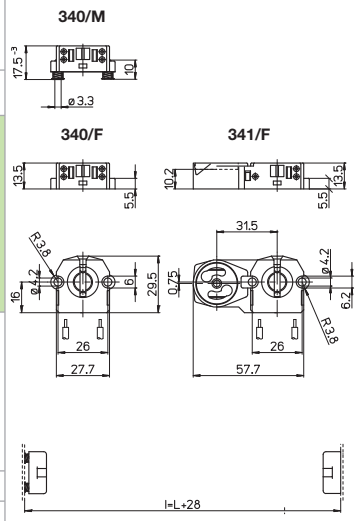

F | M | 13,5 | PBT 30° | mm² 0,5-1 | 8-9

347/F 347/M 348/F

G13	2A-250V	T130 Tm110

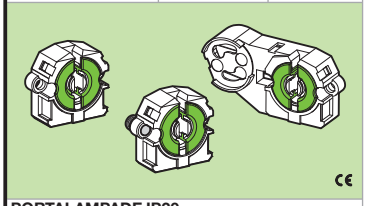

PORTALAMPADE IP20
— Corpo in policarbonato
— Contatti in lega di rame

IP20 LAMPHOLDERS
— Polycarbonate body
— Copper alloy contacts

347/F 347/M (660W-600V)

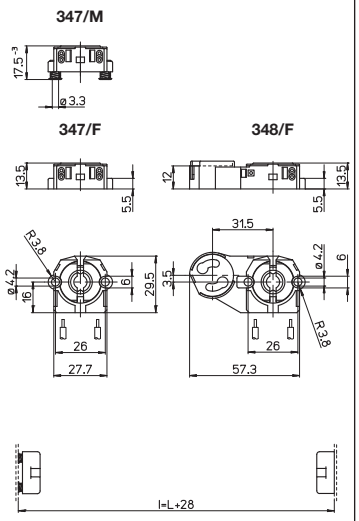

F | M | 13,5 | PBT 45° | mm² 0,5-1 | 8-9

345/F 346/F

G13	2A-250V	T130 Tm110

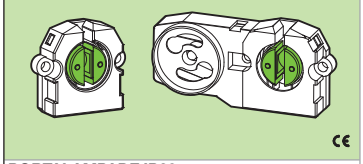

PORTALAMPADE IP20
— Corpo in policarbonato
— Contatti in lega di rame

IP20 LAMPHOLDERS
— Polycarbonate body
— Copper alloy contacts

(660W-600V)

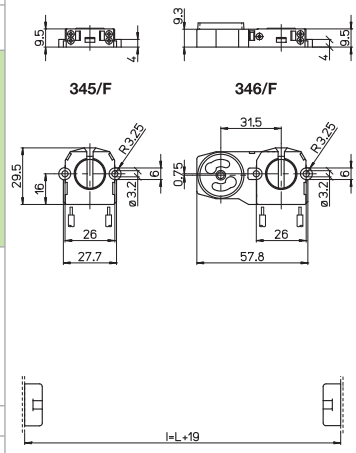

F | 9,5 | PBT 45° | mm² 0,5-1 | 8-9

30/AU

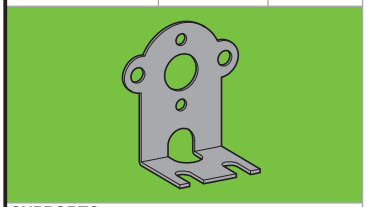

SUPPORTO
in acciaio zincato

BRACKET
in zinc plated steel

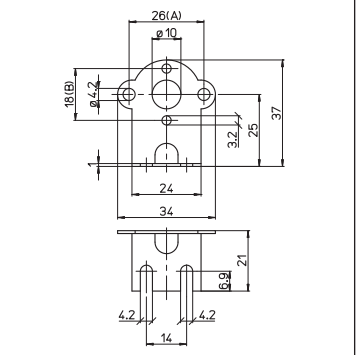

Per/For: (A) 142/... 340/... 341/... 343/... 344/...-26 345/... 346/... 347/... 348/... 349/...1345/... 1232/... 1232-H/... 1346/...

Significato dei simboli sulla copertina

AAG STUCCHI Essential for lighting